CNENGR 116
Fundamentals of Digital Electronics

Lecture 7 - Latches

Dr Zhongming Zhang

School of Engineering

Lancaster University

RECAP – Ask yourself can I…

- Convert between different number representations?
  - Dec → Bin, Bin → Dec
  - Bin → Hex, Hex → Bin, Bin → Octal, Octal → Bin,
  - Bin → BCD
  - Represent rational numbers in binary
- Represent data transmitted via serial or parallel transmission?
- Determine the period and duty cycle of a repeating signal?
- Use laws of Boolean algebra to manipulate and reduce Boolean expressions?
- Manipulate SOPs and POSs into standard form?
- Populate a truth table?
- Populate a Karnaugh map and use it to find minimum expressions?

Objectives

To:

- Introduce Latches (various types and their functionality)
- Introduce Flip-Flops and some of their applications

Before the lecture

Can you use a OR gate to keep the output with any change of inputs?

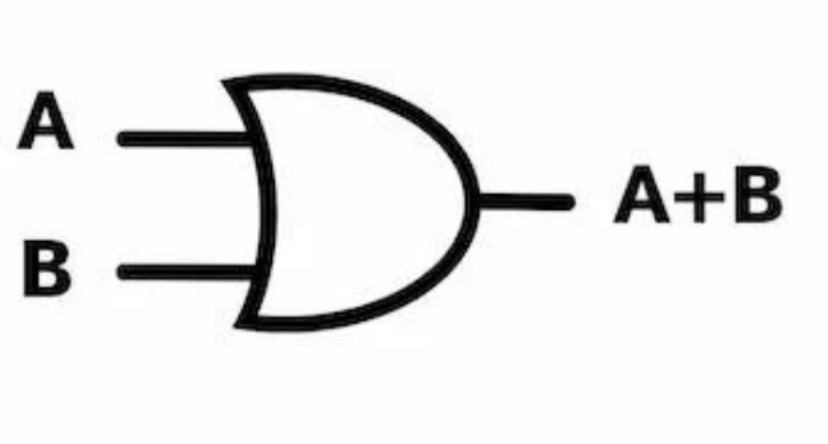

Latches

A latch is a type of temporary storage device that has two stable states (bi-stable) and is normally placed in a category separate from that of flip-flops

Different types of latches:

1. S-R (Set-Reset) Latches
2. D (Data) Latches
3. J-K (Jack Kilby) Latches

Latches and flip-flops are <u>sequential</u> logic circuits – The output is determined by the previous state of the inputs.

In other words, bits of data move through sequential circuits step-by-step. Often the data advances one step when a pulse is received from a "clock".

S-R (SET-RESET) Latch

A latch is a type of Bi-Stable logic device

Active-HIGH input S–R (SET-RESET) latch is formed with two cross-coupled NOR gates:

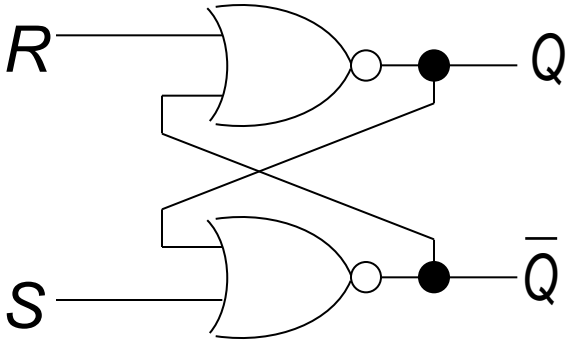

Active-LOW input $\overline{S}-\overline{R}$ latch is formed with two cross-coupled NAND gates:

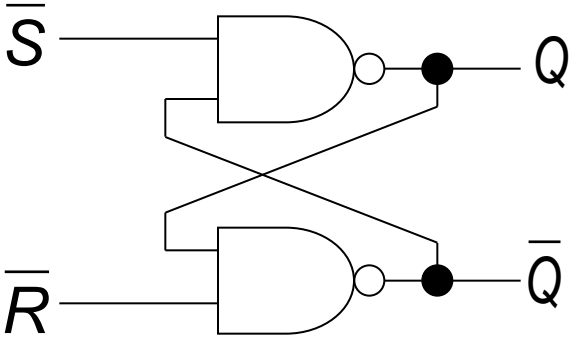

Active-HIGH input $S-R$ Latch

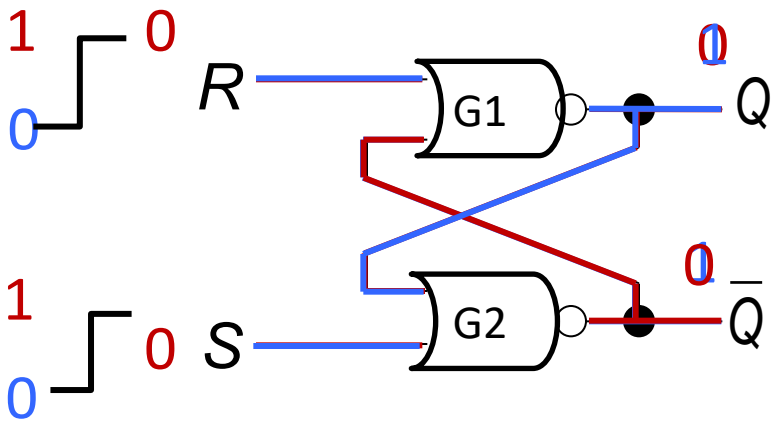

S	R	Q	$\overline{Q}$
1	1	0	0
0	1	0	1
1	0	1	0
0	0	0 1	1 0

INVALID STATE
The fastest gate wins

State of Q is unknown!!

Active-LOW input $\overline{S}-\overline{R}$ Latch

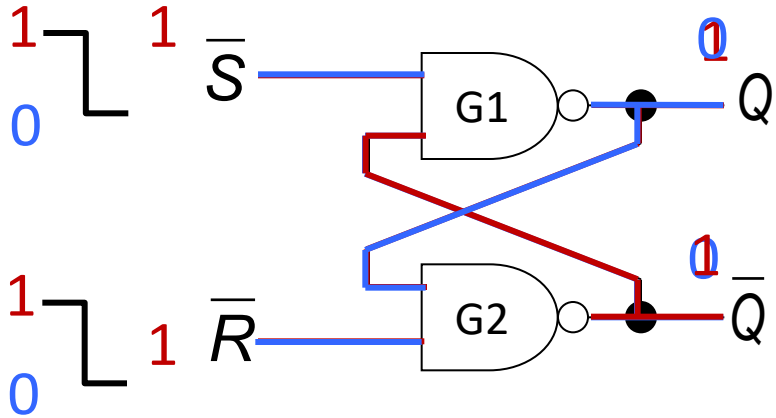

$\overline{S}$	$\overline{R}$	Q	$\overline{Q}$
0	0	1	1
0	1	1	0
1	0	0	1
1	1	1 0	0 1

INVALID STATE
The fastest gate wins

State of Q is unknown!!

Active-LOW input $\overline{S}-\overline{R}$ Latch

In order to explain the functionality of $\overline{S}-\overline{R}$ latch we substitute NAND gates by negative-OR:

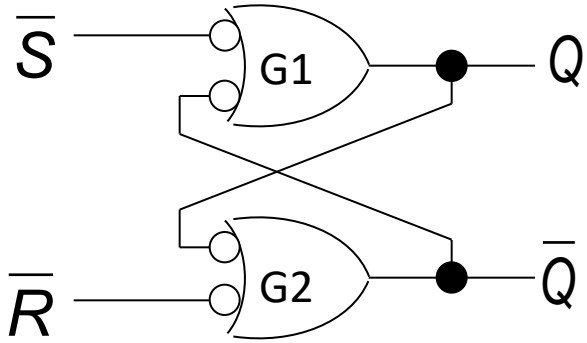

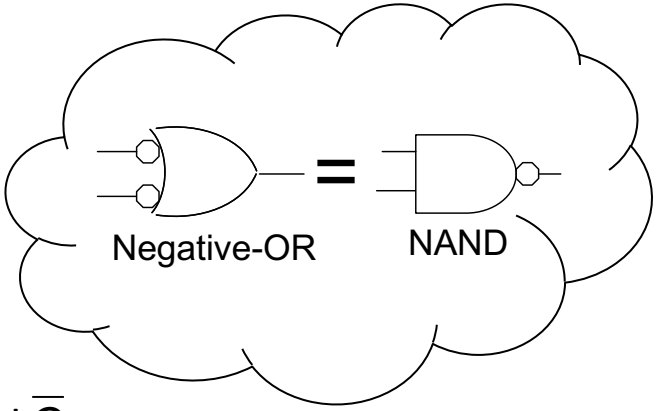

The latch above has 2 inputs, $\overline{S}$ and $\overline{R}$, and 2 outputs Q and $\overline{Q}$.

Assume inputs $\overline{S}$ and $\overline{R}$ and output Q are HIGH

→ Both inputs to G2 are HIGH

→ Output of G2 ($\overline{Q}$) is LOW

This LOW output of G2 is coupled to G1 input to ensure that the output of G1 is kept HIGH (doesn't matter what $\overline{S}$ is)

When the Q output is HIGH, the latch is in the **SET** state. It will remain in this state indefinitely until a LOW is temporarily applied to the $\overline{R}$ input

Active-LOW input $\overline{S}-\overline{R}$ Latch

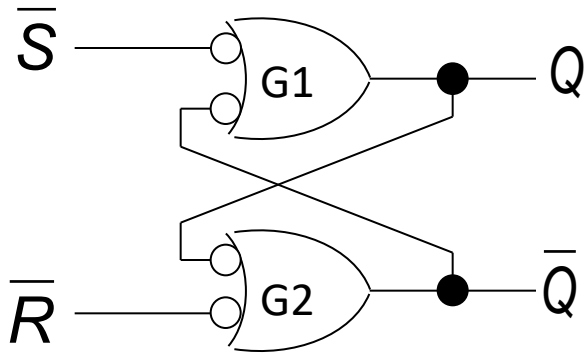

With $\overline{R}$= LOW and $\overline{S}$ = HIGH the output of G2 is HIGH

This HIGH on $\overline{Q}$ is fed into G1

→ Both G1 inputs are HIGH

→ Q is LOW

This LOW output of G1 is coupled to G2 input to ensure that the output of G2 is kept HIGH

When Q output is LOW the latch is in the **RESET** state

Active-LOW input $\overline{S}-\overline{R}$ Latch

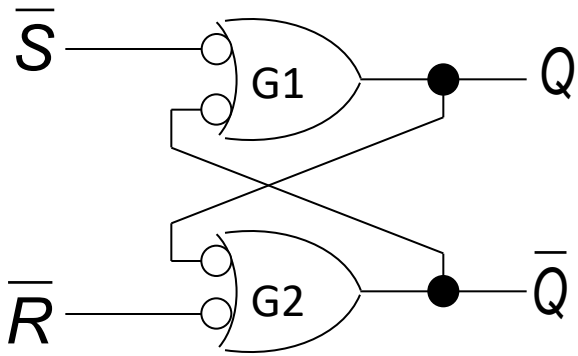

With $\overline{R}$= LOW and $\overline{S}$ = LOW simultaneously, both outputs of G1 and G2 are forced to **HIGH**. If both inputs now go HIGH at the same time, both outputs will try to go LOW. The fastest gate will win here. This condition is hence INVALID and a LOW on both $\overline{R}$ and $\overline{S}$ is NOT permitted

Note : The gates G1 and G2 will never have the same propagation delay due to imperfections in the manufacturing process. Take a look at the cross section of a transistor. Here it is clear that at nanometer dimensions, it is not possible to make all transistors exactly the same hence the electrical characteristics will never be identical

Basic MOSFET Device

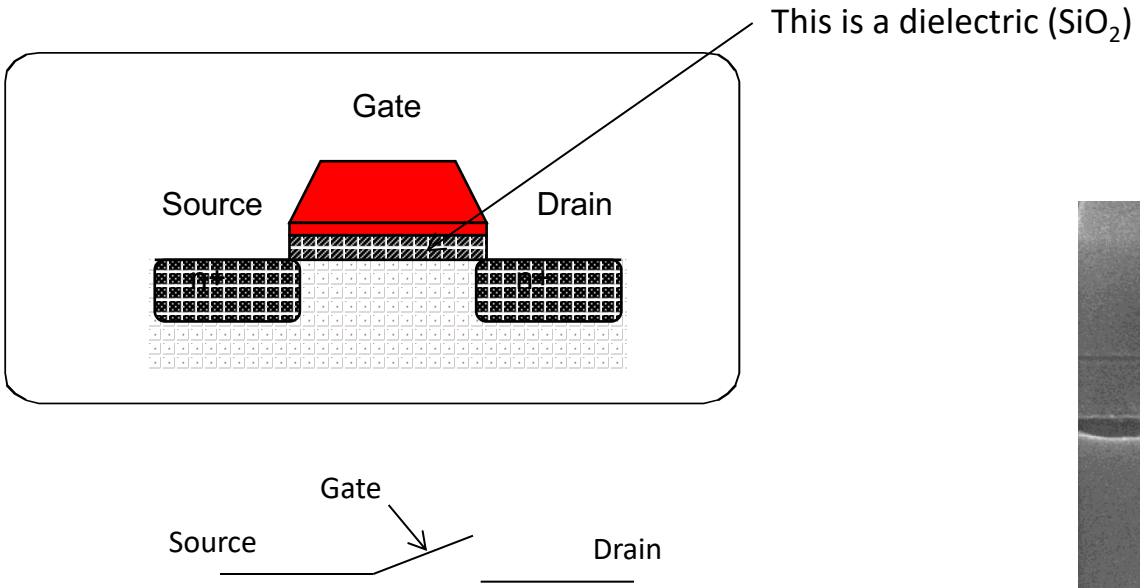

For digital circuits the MOS works like a voltage controlled switch

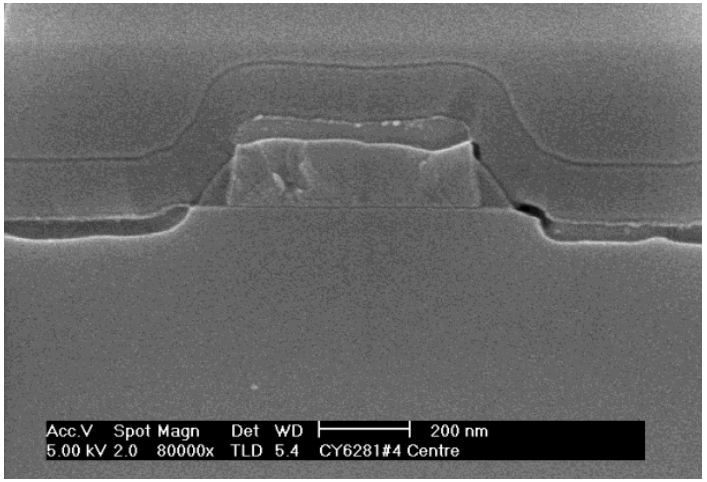

A microscope image (cross section) of a MOS device on a silicon chip

Logic Symbols for Latches

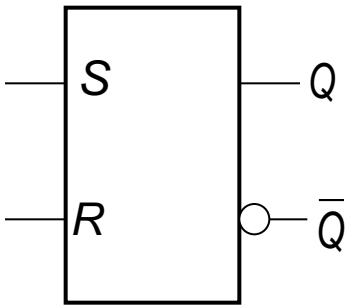

Active-HIGH input
S-R latch

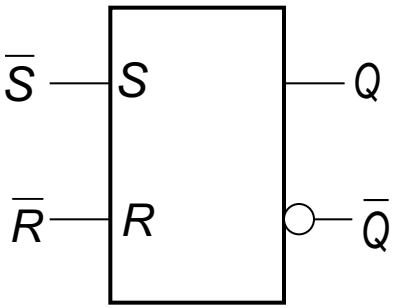

Active-LOW input
$\overline{S}-\overline{R}$ latch

Timing diagram for the active-LOW input $\overline{S}-\overline{R}$ latch:

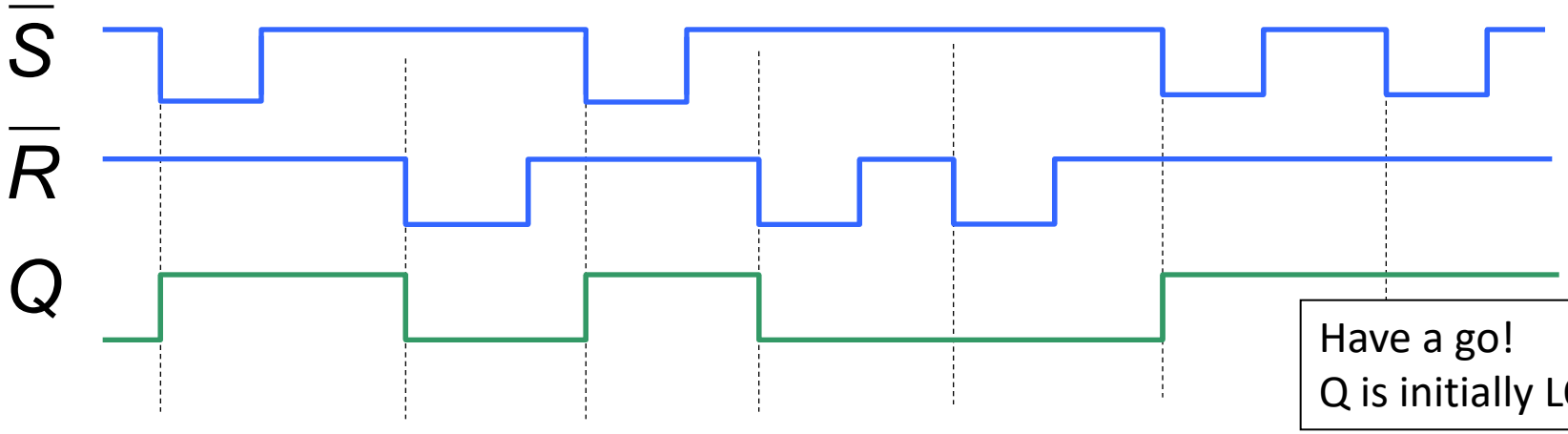

Have a go!
Q is initially LOW

$\overline{S}-\overline{R}$ Latch application

Latch as a contact-bounce eliminator

When the pole of a switch strikes the contact on switch closure, it physically vibrates or “bounces” several times before finally making a solid contact. Such bounces produce voltage spikes that in most cases need to be avoided.

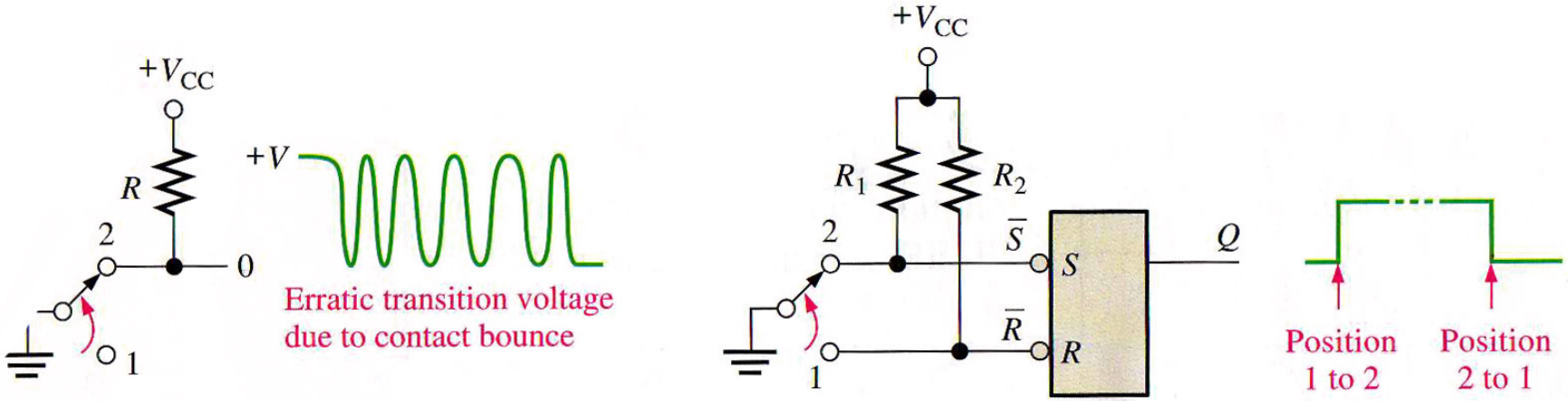

(a) Switch contact bounce

(b) Contact-bounce eliminator circuit

The Gated S-R Latch

A gated latch requires an enable input EN. The S and R inputs control the state that the latch will go to when EN is HIGH. If EN is LOW the latch will not change.

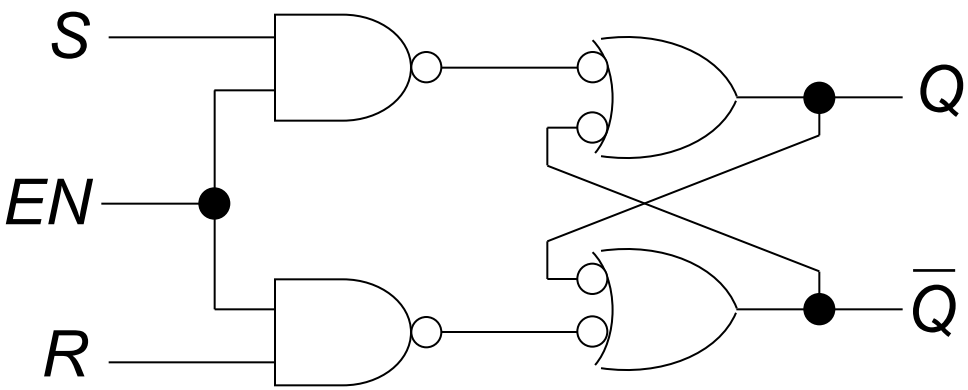

Logic diagram

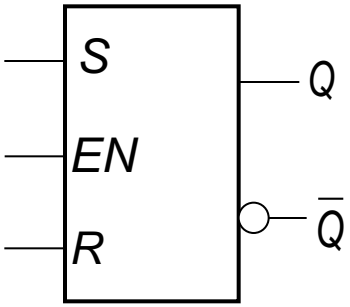

Logic symbol

Example:
Gated S-R Latch waveform

Have a go!
Q is initially LOW

Determine the Q output waveform if the inputs of Gated S-R latch are given below:

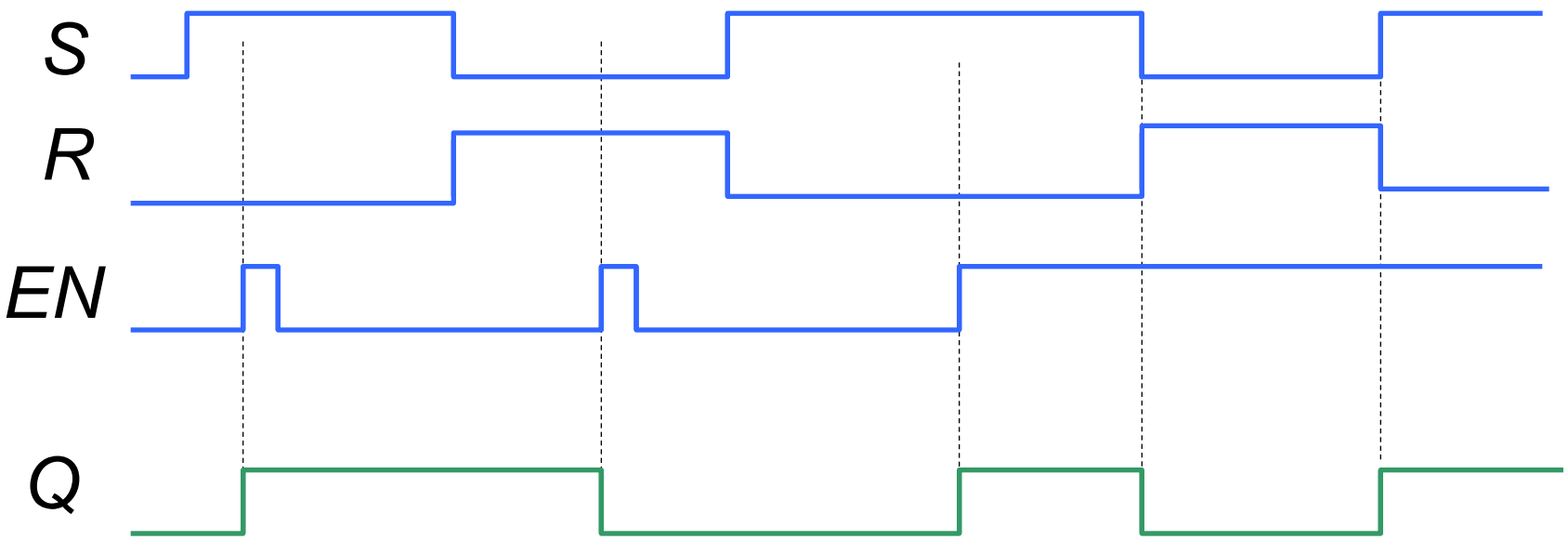

The Gated D Latch

A gated D latch differs from S-R Latch because it has only 1 input in addition to *EN* input. The output of this latch follows the input *D* if *EN* is HIGH

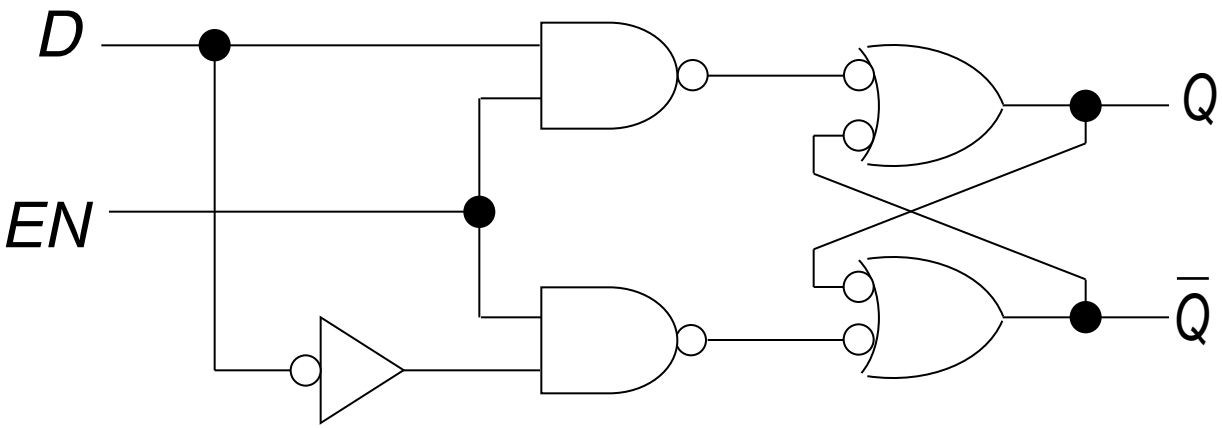

Logic diagram

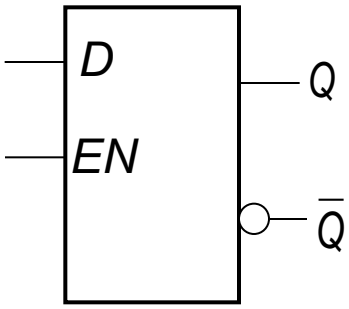

Logic symbol

Example:
Gated D Latch waveform

Have a go!
Q is initially LOW

Determine the Q output waveform if the inputs of Gated D latch are given below:

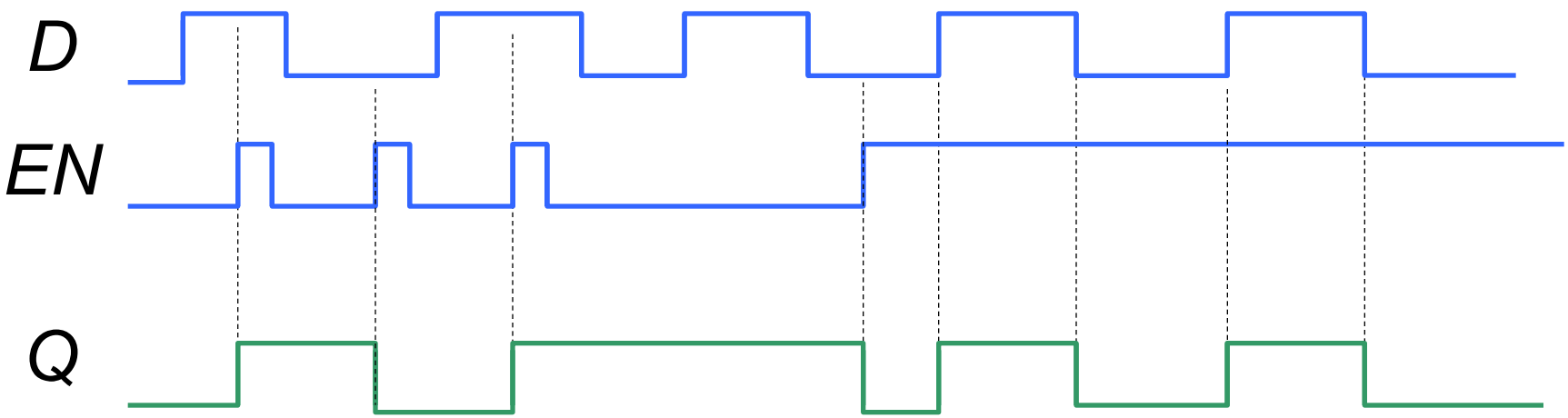

Class Exercise

Assume the inverter and the AND gates have a negligible propagation delay but the NOR gates have a propagation delay of 10ns. Sketch the outputs S1, R1, Q, and Q' of the D latch shown below for the given inputs D and C. Each time division is 10ns. Assume Q' is initially high.

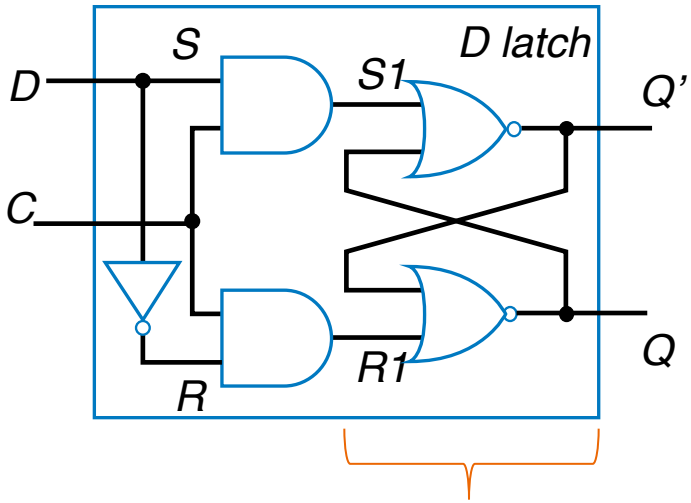

NOR gates so Active-High SR latch

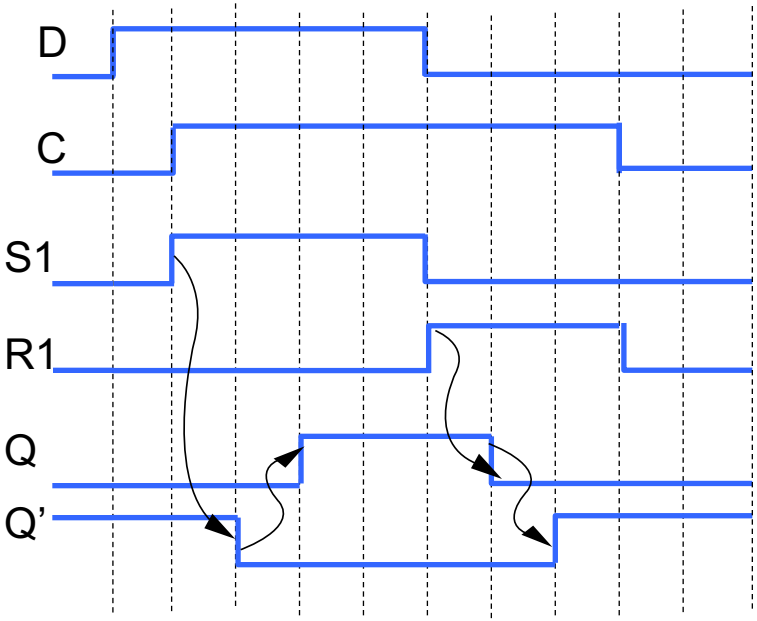

Edge-triggered Flip-Flops

An **edge-triggered flip-flop** changes state either at the positive edge or negative edge of the clock pulse and is sensitive to its inputs only in this situation.

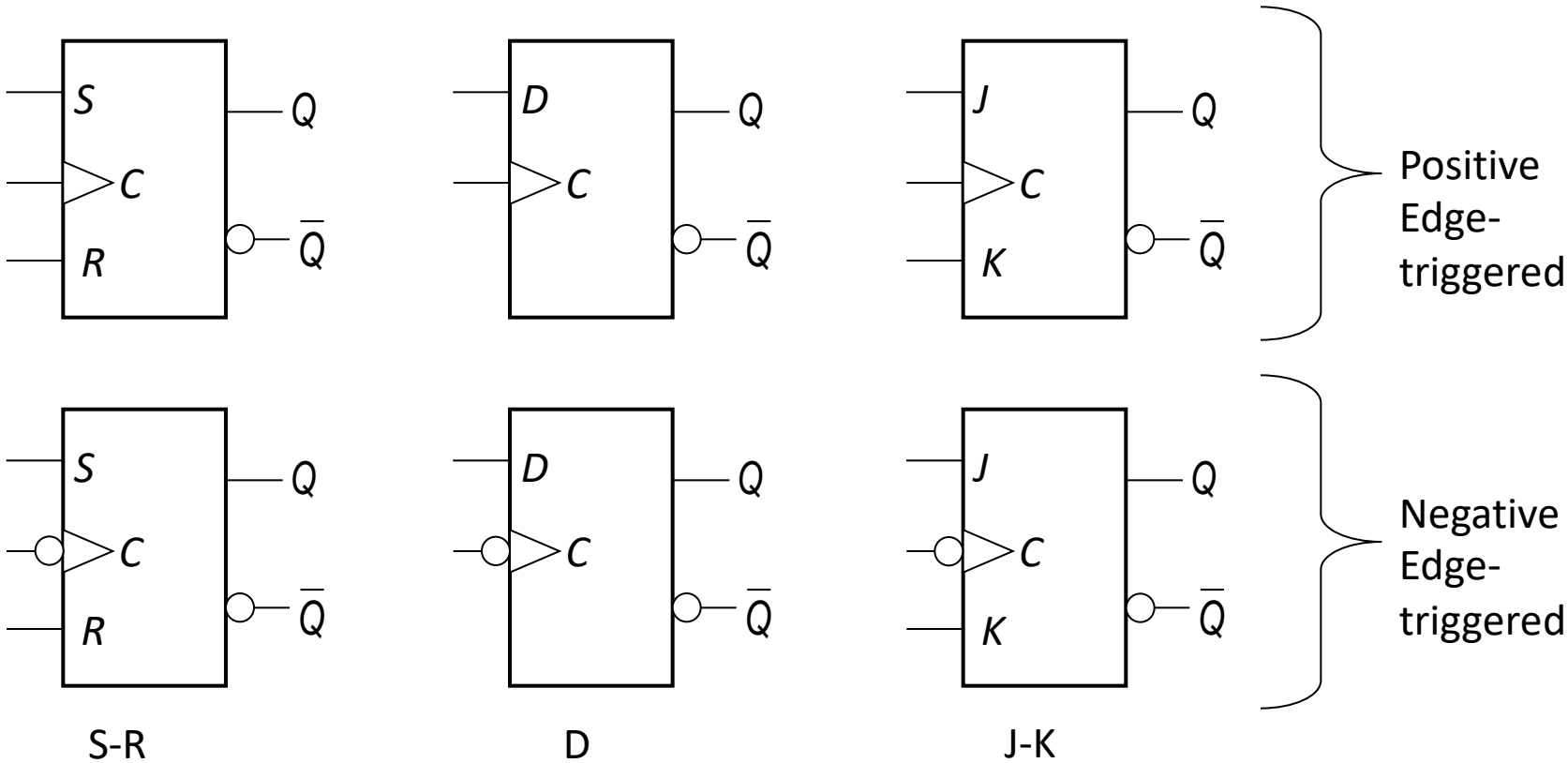

Edge-triggered S-R Flip-Flop

An Edge-triggered S-R flip-flop cannot change state except on the positive edge of the clock pulse

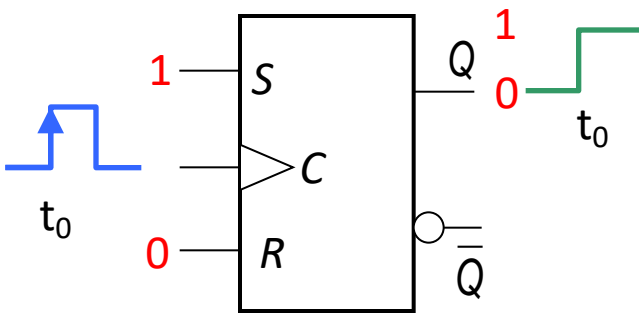

S=1; R=0
SET on positive edge

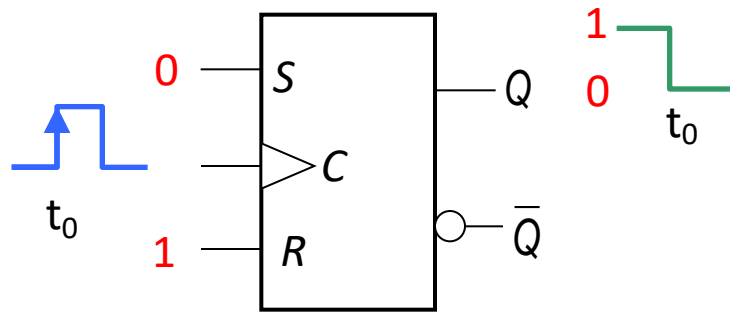

S=0; R=1
RESET on positive edge

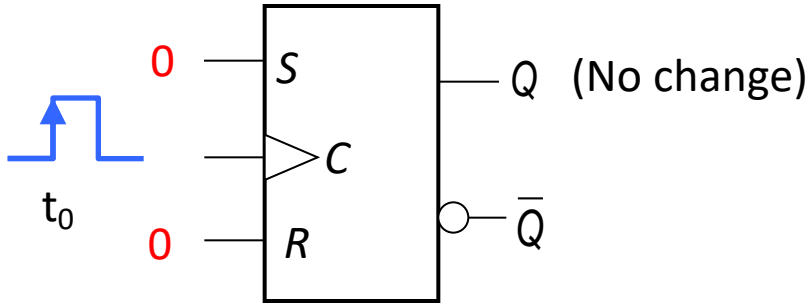

S=0; R=0; flip-flop does not change
If SET remains SET, if RESET remains RESET

Example:
Flip-flop waveform

Have a go!
Q is initially LOW

Determine the Q and $\overline{Q}$ output waveforms for the S, R, CLK inputs given below:

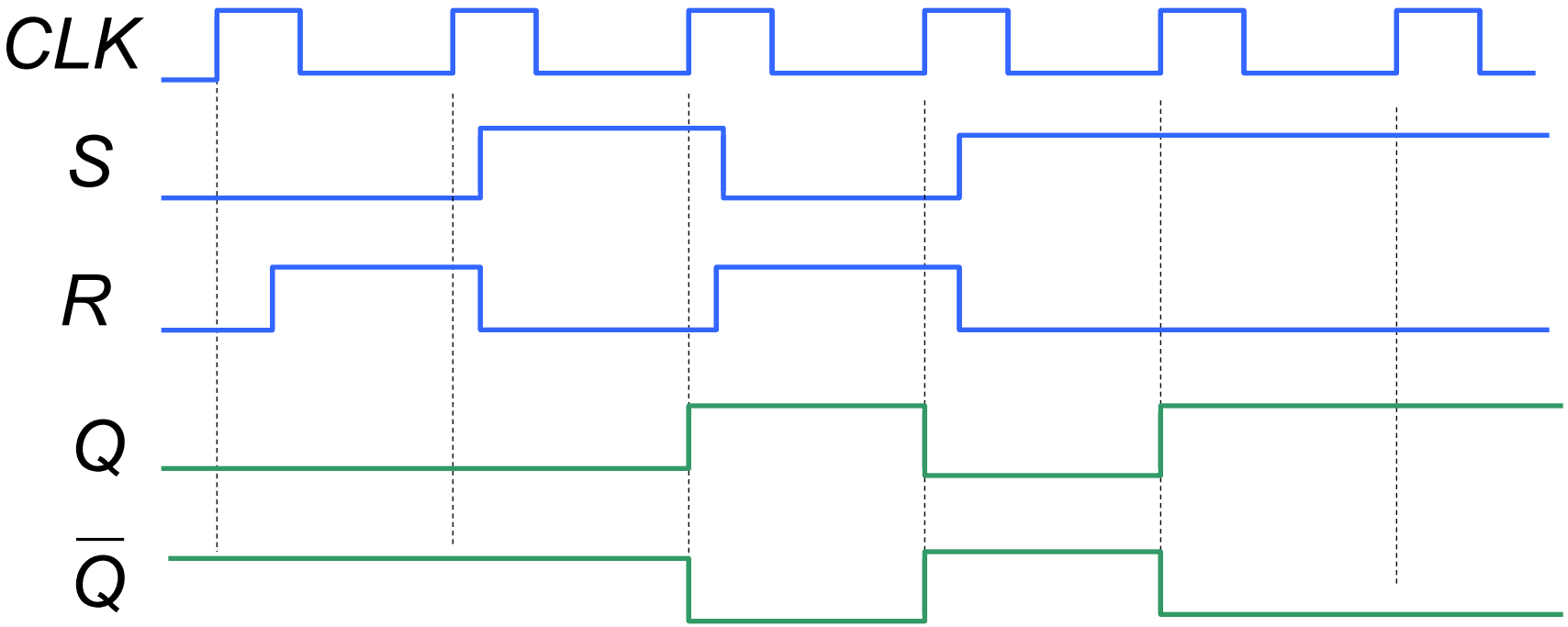

A method of edge-triggering

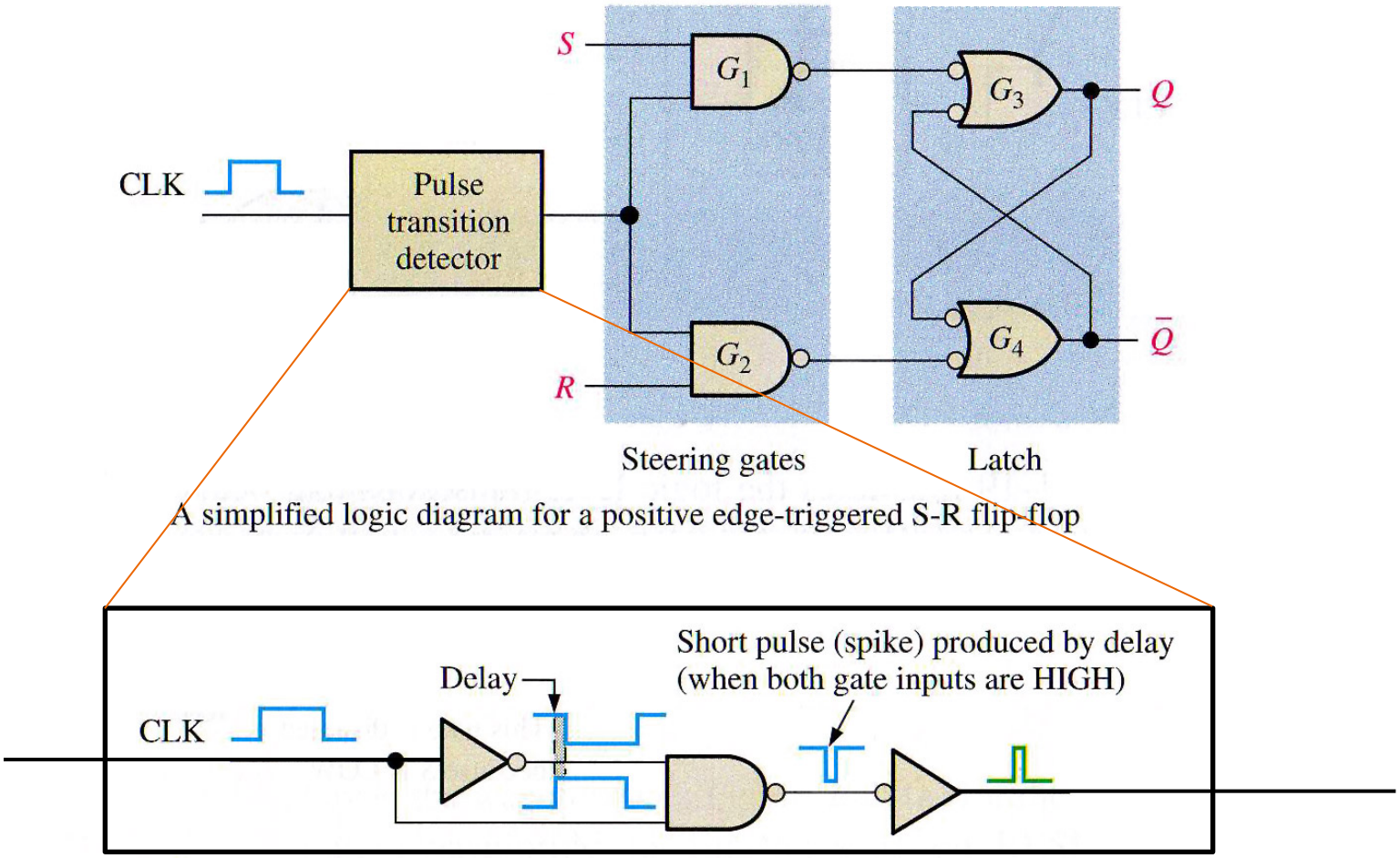

A simplified logic diagram for a positive edge-triggered S-R flip-flop

A type of pulse transition detector

The flip-flop edge transition

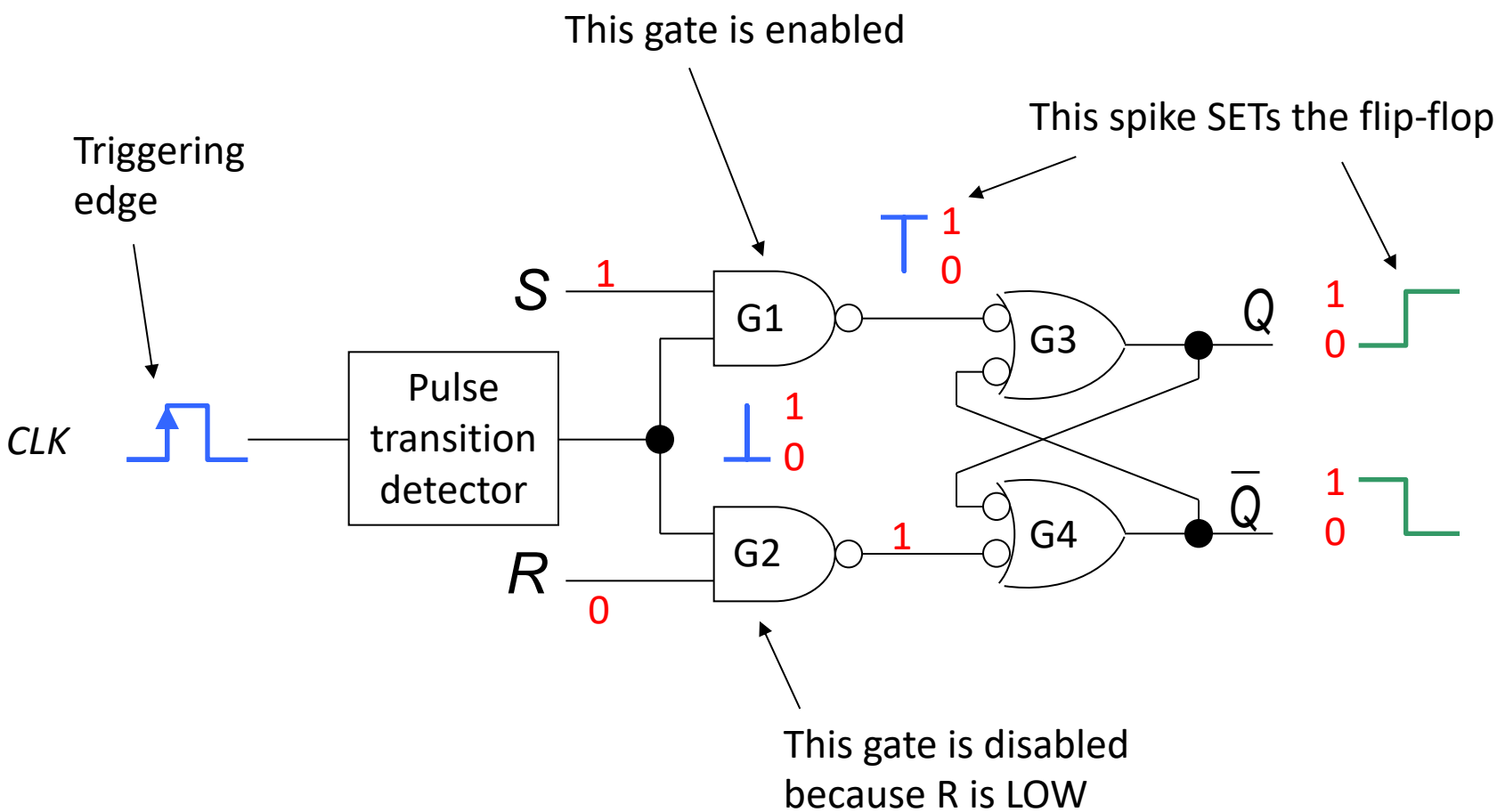

The flip-flop edge transition

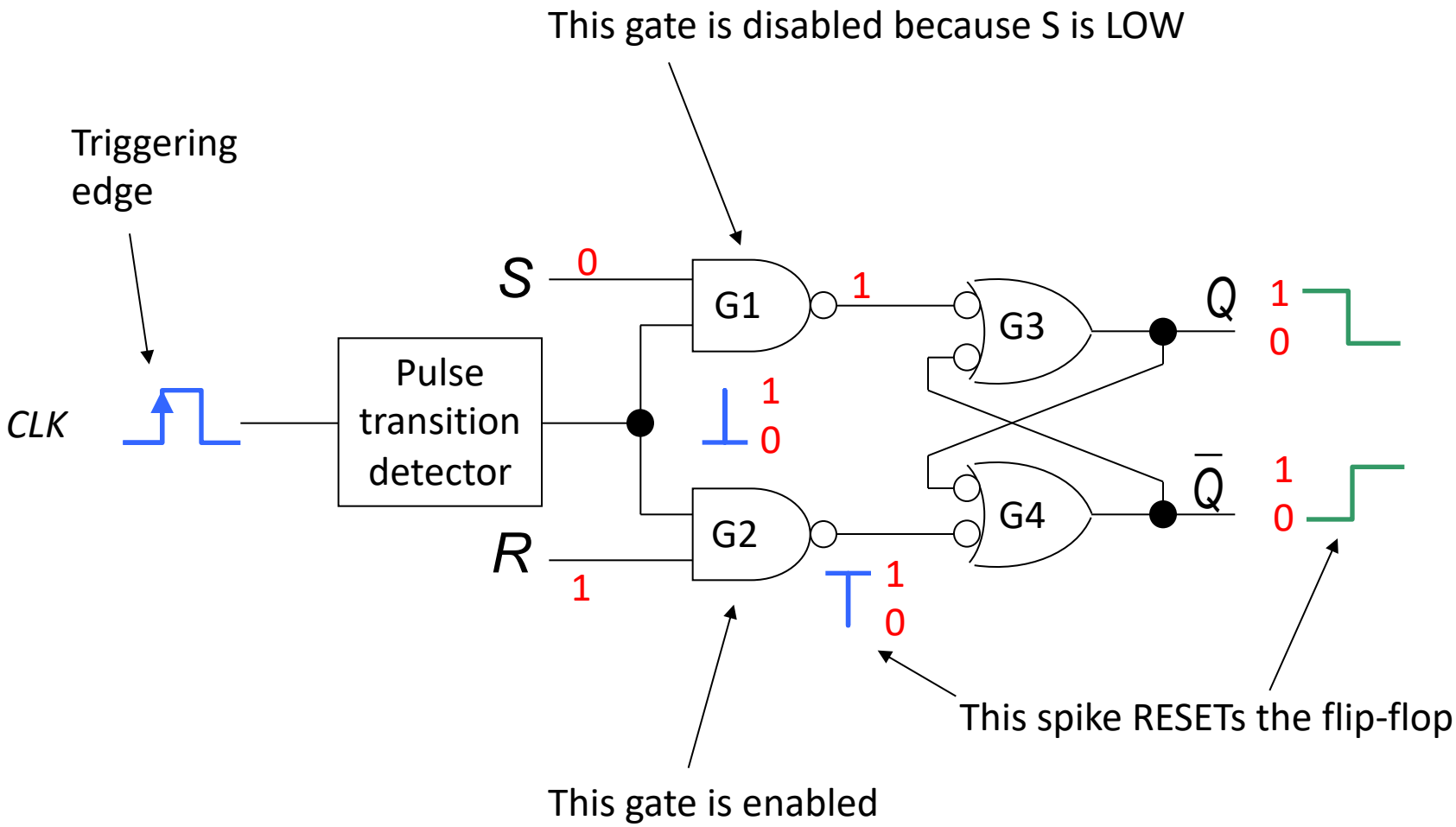

Edge-triggered J-K flip-flop

The J-K flip-flop is versatile and a widely used type of flip-flop. The functioning of the flip-flop is identical to that of the S-R flip-flop in the SET, RESET and no-change conditions of operation. The difference is that the J-K flip flop has **no invalid condition**.

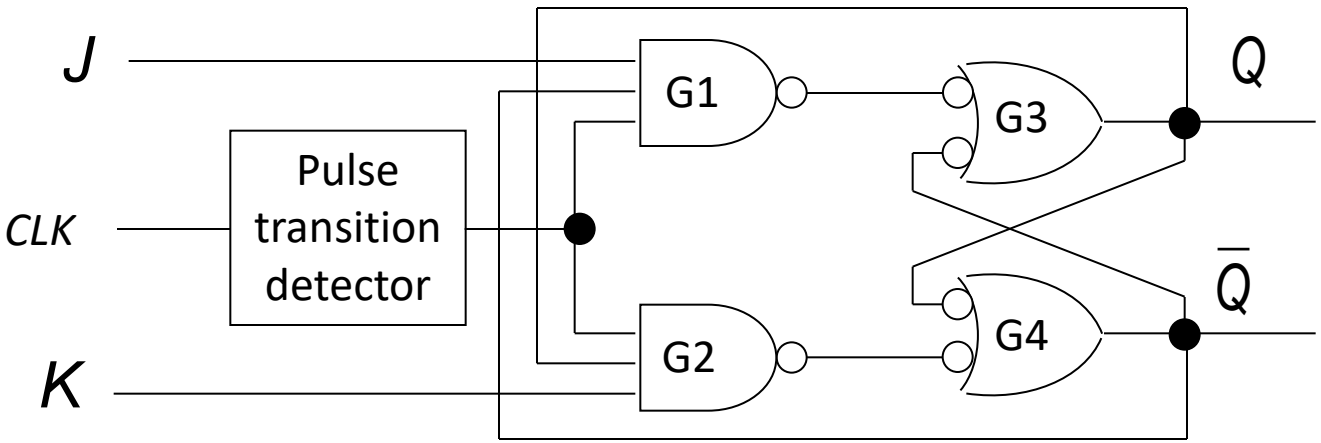

J-K flip-flop toggle condition

The Toggle condition is when both inputs are HIGH, resulting in SET and RESET actions of the circuit every rising edge CLK cycle.

J	*K*	*CLK*	Q	$\overline{Q}$	*Comment*
0	0	↑	Q	$\overline{Q}$	No Change
0	1	↑	0	1	RESET
1	0	↑	1	0	SET
1	1	↑	$\overline{Q}$	Q	Toggle

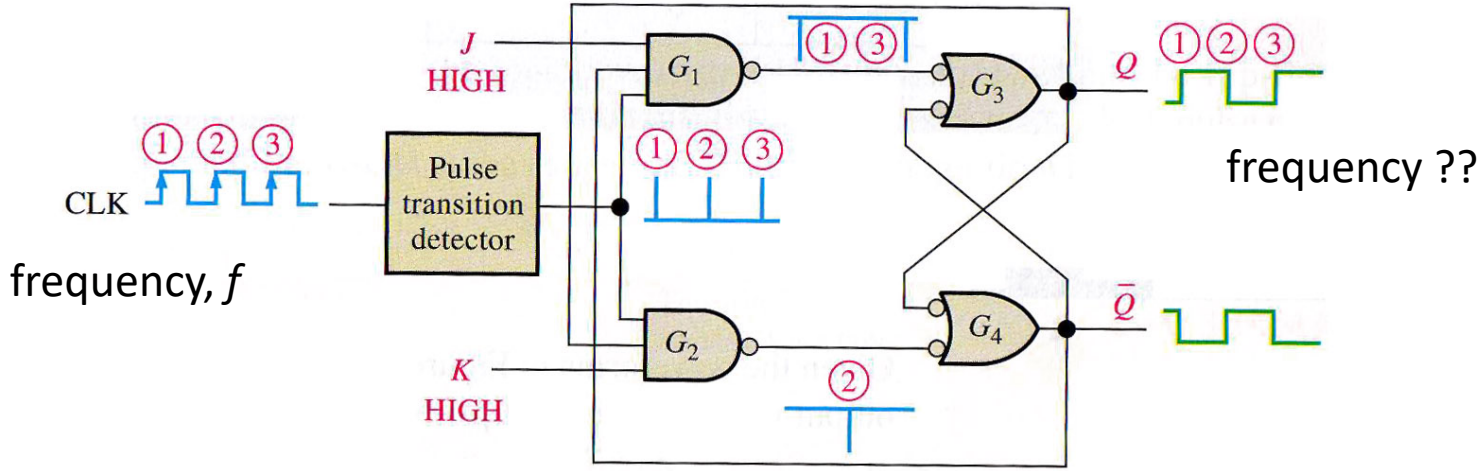

Asynchronous – Preset and Clear inputs

Synchronous sequential circuit	Asynchronous sequential circuit
Easy to design	Difficult to design
A clocked flip flop acts as a memory element	Unclocked flip flop or time delay element is used as a memory element
They are slower	Faster as no clock present
The state of the memory element is only affected at the active edge of the clock, if input is changed	The state of the memory element will change any time as soon as input is changed

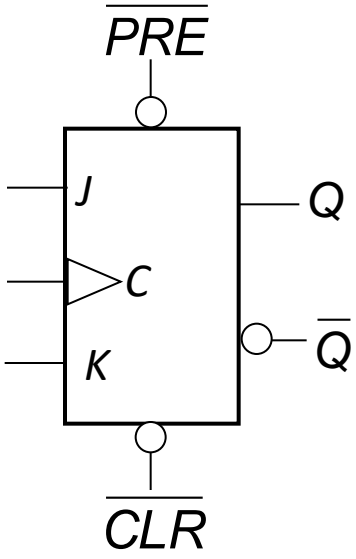

Logic symbol

Asynchronous – Preset and Clear inputs

For the flip-flops just discussed (S-R, D and J-K) inputs are **synchronous** because data on these inputs are transferred to the flip-flop's output only on the triggering edge of the clock.

Here we have an **asynchronous** Preset (PRE) and Clear (CLR) J-K flip-flop

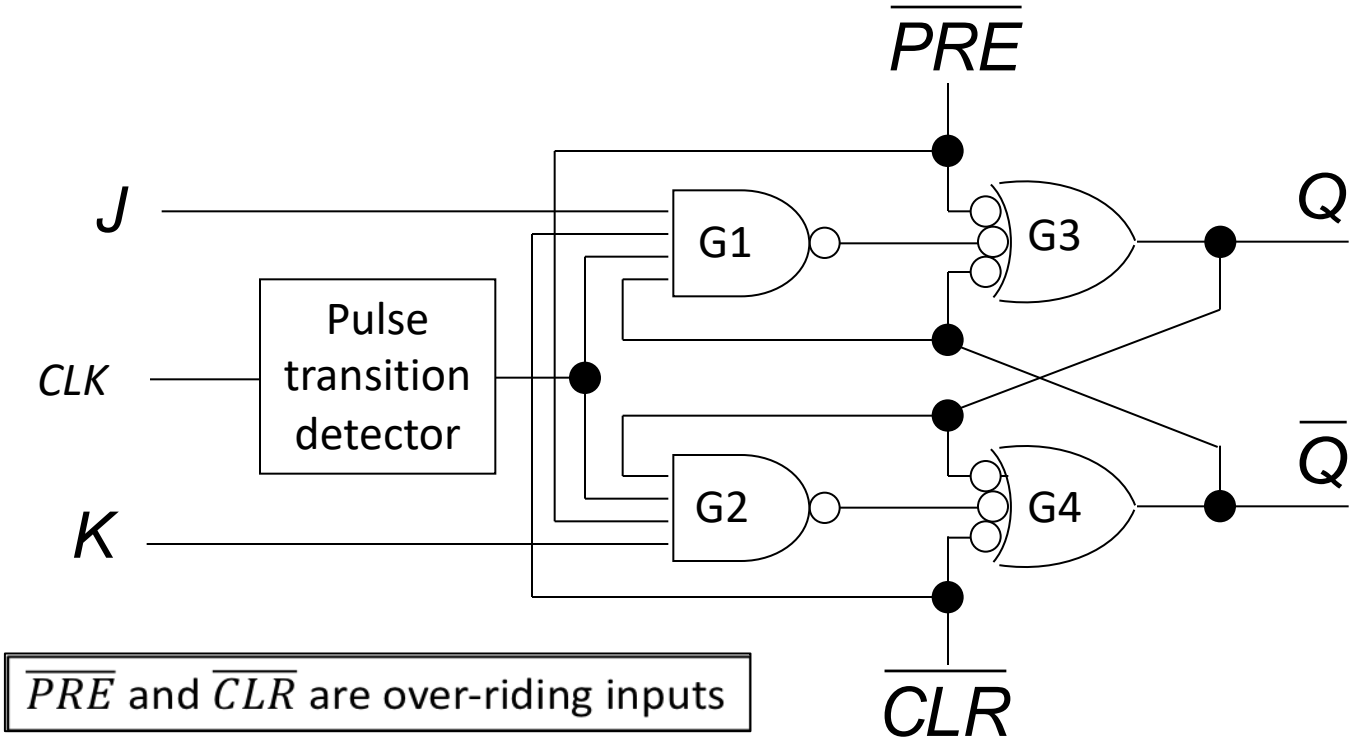

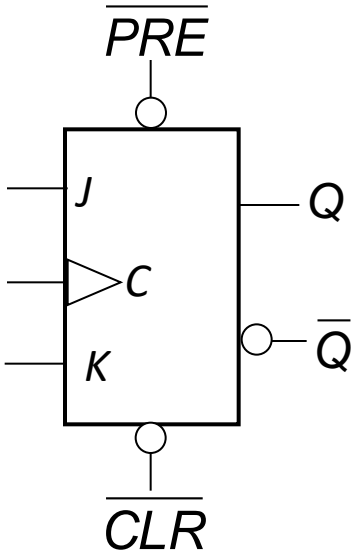

Logic symbol

$\overline{PRE}$ and $\overline{CLR}$ are over-riding inputs

Example: Asynchronous J-K operation

For the positive edge-triggered J-K flip-flop with preset and clear inputs and with J and K both equal to 1, determine the Q output if Q is initially LOW.

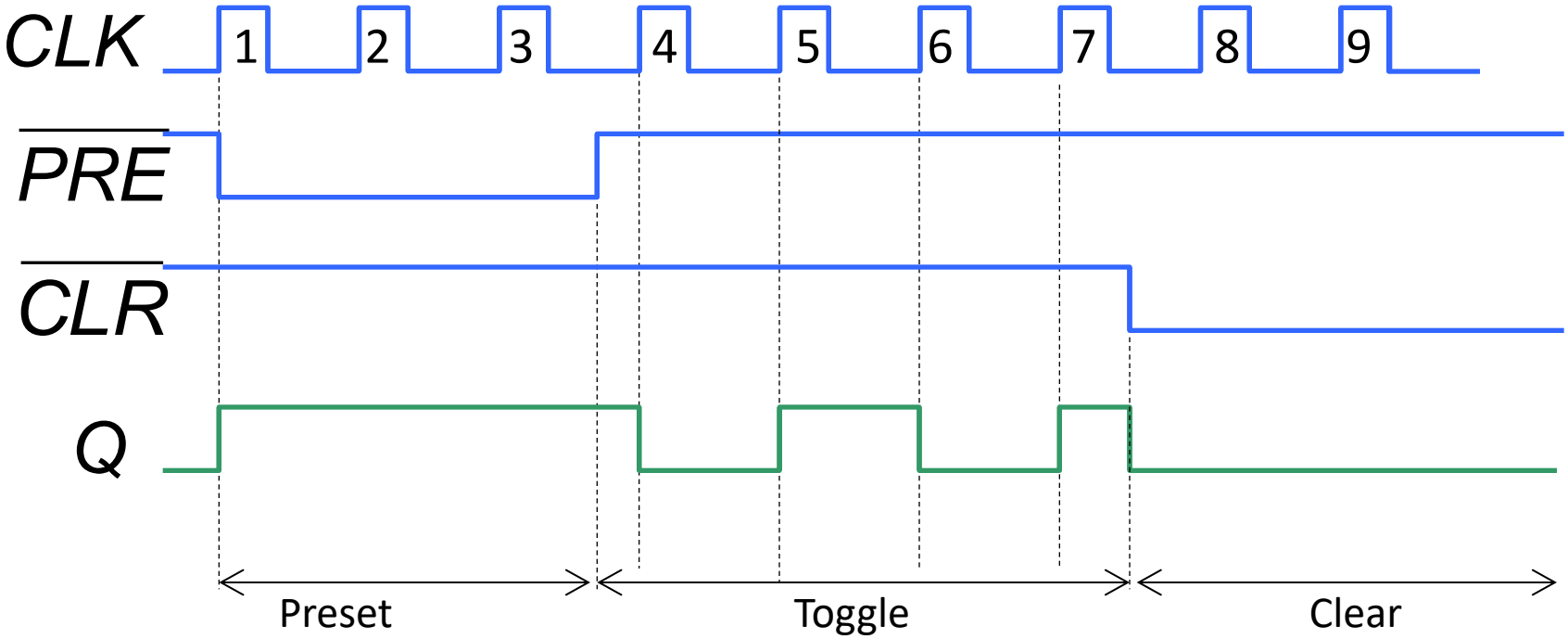

A Quick Exercise

Determine the Q output waveform for a flip-flop working with the positive edge of the clock for the given Clk, D, PR, and CLR inputs. It is assumed the flip-flop is initially in the RESET condition.

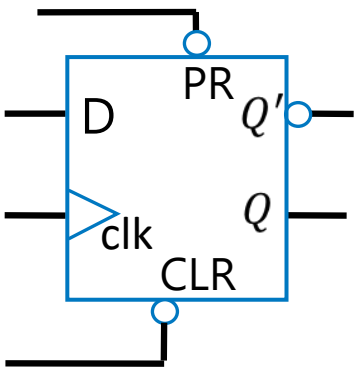

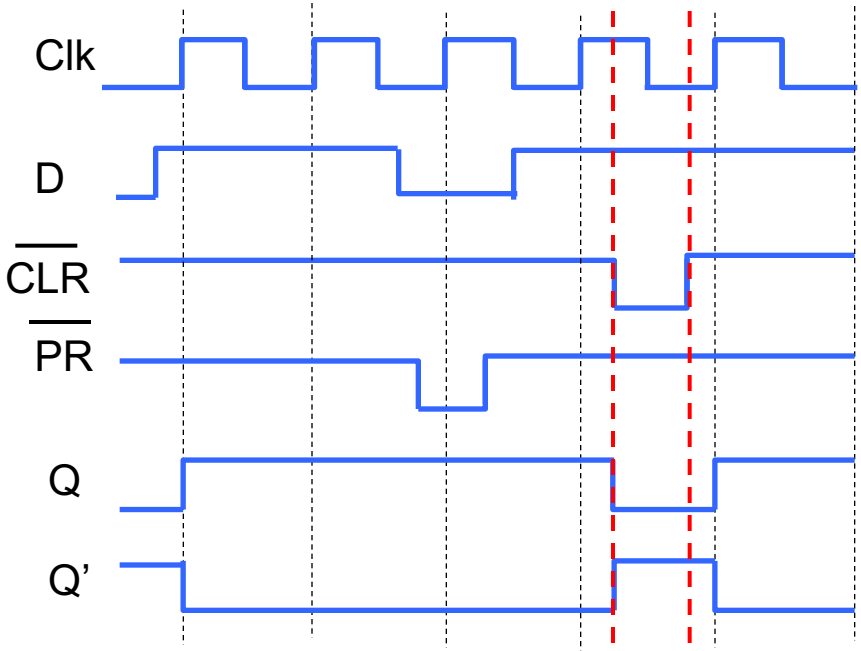

Calling Circuit, A Practical Example

- Design a calling circuit using only D flip-flop

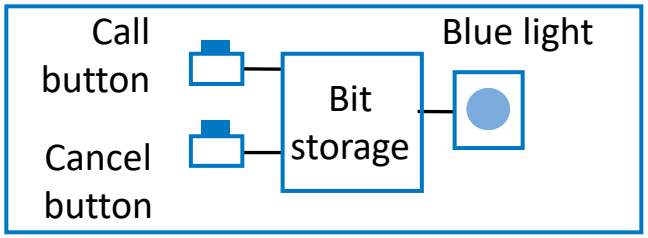

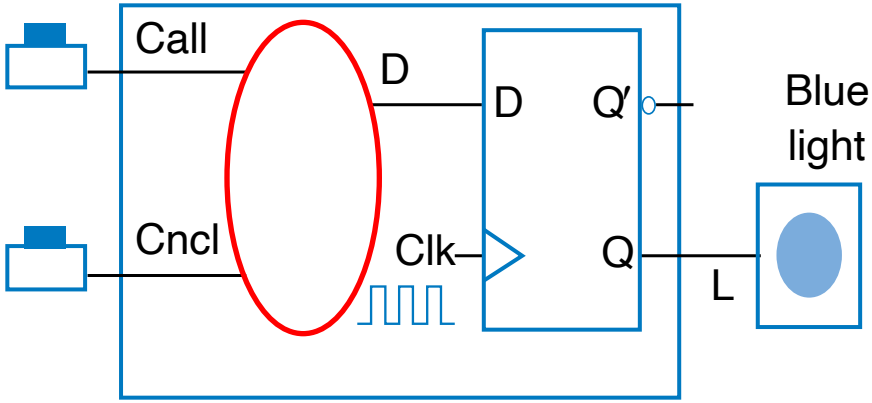

  - Inputs are Call, Cancel, and present value of D flip-flop, i.e. Q
  - Output is D which produces the next state of the D flip-flop
  - If Call is pressed store 1, if Cancel is pressed store 0
  - If neither is pressed store the present value

Calling Circuit, A Practical Example

- Capturing the behavior

Call	Cncl	Q	D	
0	0	0	0	Preserve value if Q=0, make D=0; if Q=1, make D=1
0	0	1	1	
0	1	0	0	Cancel make D=0
0	1	1	0	
1	0	0	1	Call make D=1
1	0	1	1	
1	1	0	1	Let's give priority to Call make D=1
1	1	1	1	

- Converting to equation

$$D = \left(\overline{Cancel}\,.\,Q\right) + Call$$

Calling Circuit, A Practical Example

- Converting to circuit

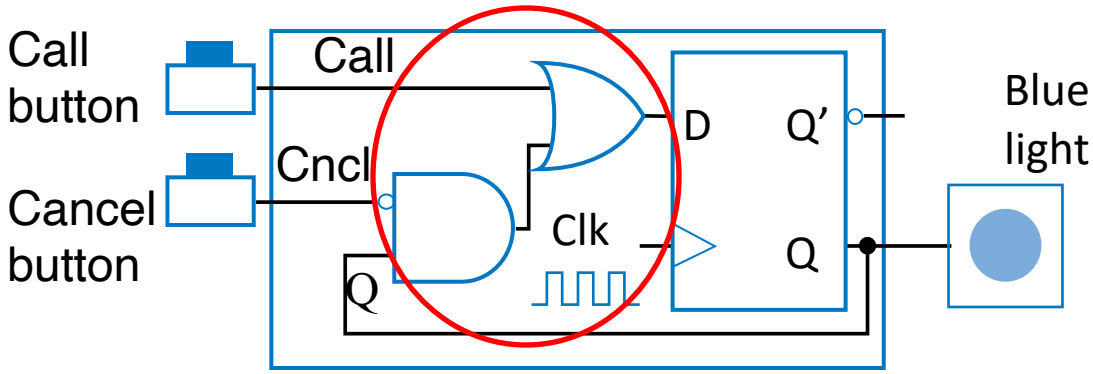

Application: Frequency Division

One of the applications of a flip-flop is dividing the frequency of a periodic waveform.

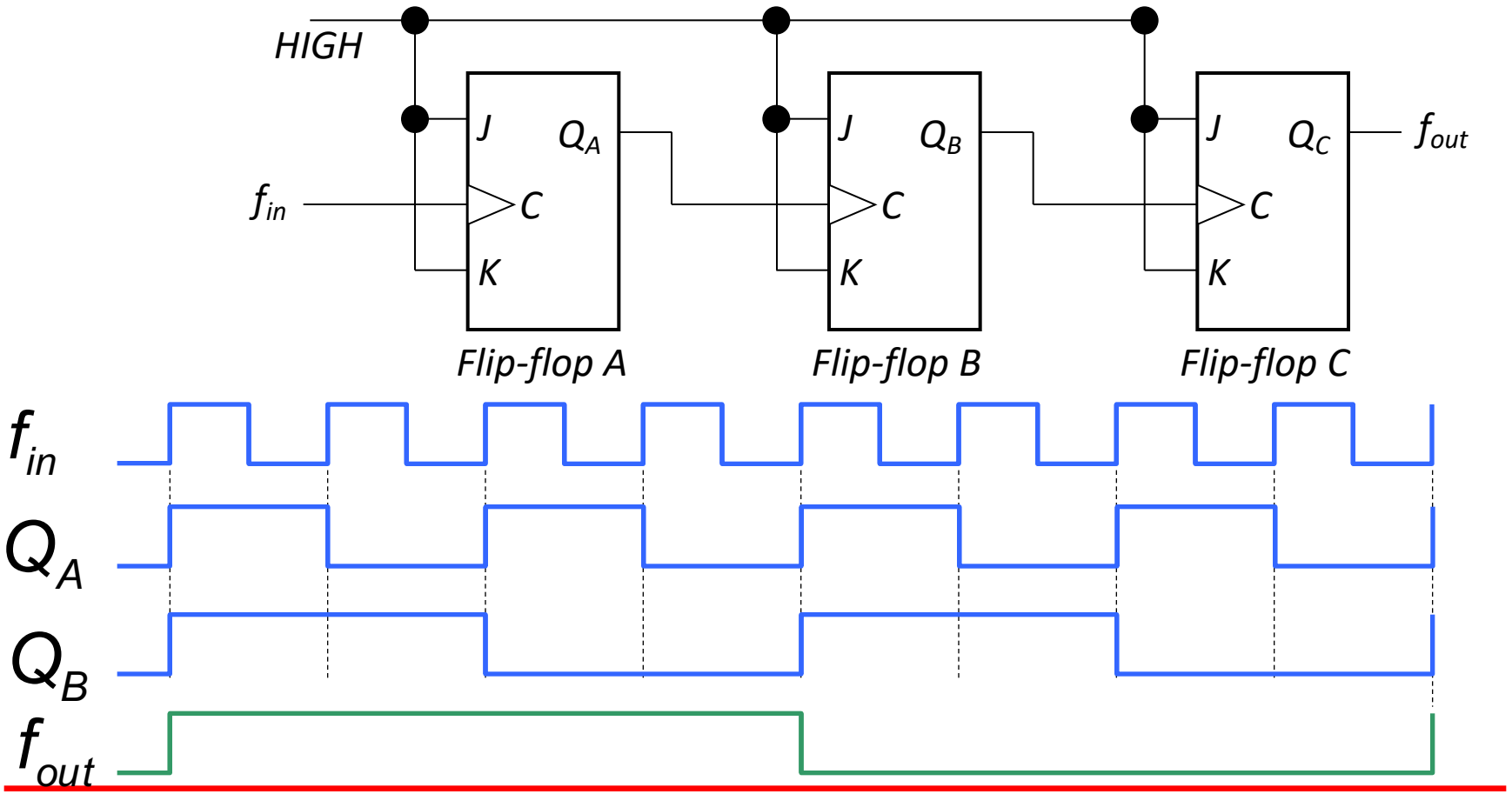

Summary

Latches

- S-R
- D
- J-K

Flip-flops

Example Application: Call Circuit and Frequency Division

Latches	Flip Flops
Latches are building blocks of sequential circuits and these can be built from logic gates	Flip flops are also building blocks of sequential circuits. But, these can be built from the latches.
Latch continuously checks its inputs and changes its output correspondingly.	Flip flop continuously checks its inputs and changes its output correspondingly only at times determined by clocking signal
The latch is sensitive to the duration of the pulse and can send or receive the data when the switch is on	Flipflop is sensitive to a signal change. They can transfer data only at the single instant and data cannot be changed until next signal change. Flip flops are used as a register.
It is based on the enable function input	It works on the basis of clock pulses
It is a level triggered, it means that the output of the present state and input of the next state depends on the level that is binary input 1 or 0.	It is an edge triggered, it means that the output and the next state input changes when there is a change in clock pulse whether it may a +ve or -ve clock pulse.